ADC Lab Logbook

Part 3 | Section 3: Optimisation of a CE Amplifier Configuration

Section 3: Optimisation of a Different CE Amplifier Configuration

This section investigates a collector-feedback biased CE amplifier ($V_{CC} \rightarrow R_C \rightarrow$ collector, with R_{B1} from collector to base, R_{B2} and R_{B3} from base to ground). The aim is to use LTspice simulation to find component values that optimise gain while maintaining acceptable temperature stability and minimising power consumption.

Operating Point — LTspice Simulation

Circuit and Component Values

The circuit was designed in LTspice with the following components: R_C = 10 kΩ, R_{B1} = 220 kΩ, R_{B2} = 67 kΩ, R_{B3} = 5.5 kΩ, C_1 = C_2 = 100 nF, transistor BC547B, V_{CC} = 5 V.

A DC operating point simulation (.op) at T = 40°C confirmed V_C = 2.5025 V ≈ 2.5 V, validating the bias design at elevated temperature.

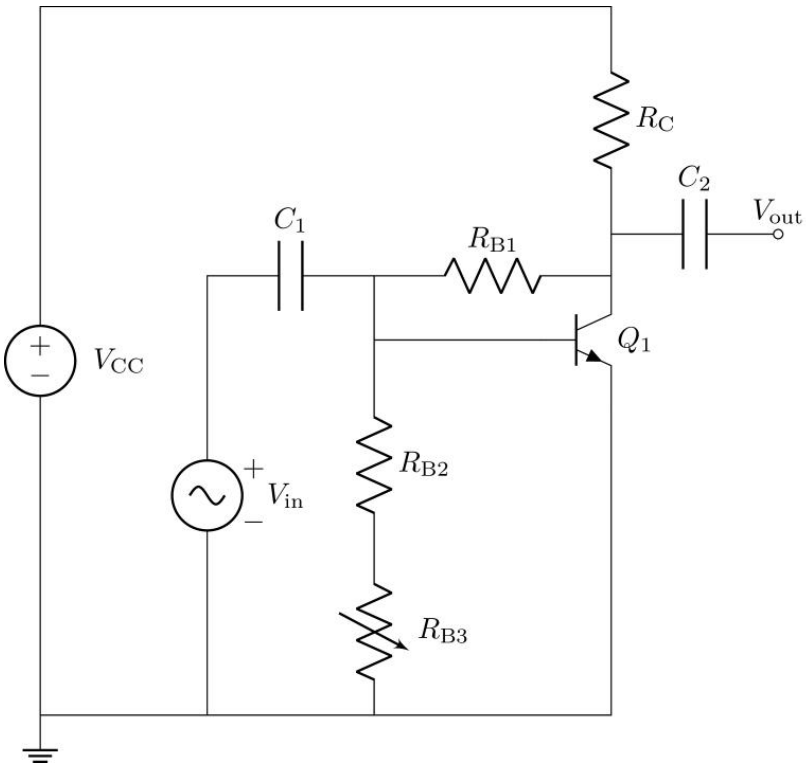

Temperature Stability

- **T = 0°C:** V_C = 2.785 V
- **T = 40°C:** V_C = 2.500 V (design point)
- **T = 80°C:** V_C = 2.210 V

The variation of approximately ±0.3 V over a 40°C temperature swing is acceptable for the application.

The graph is in the next page.

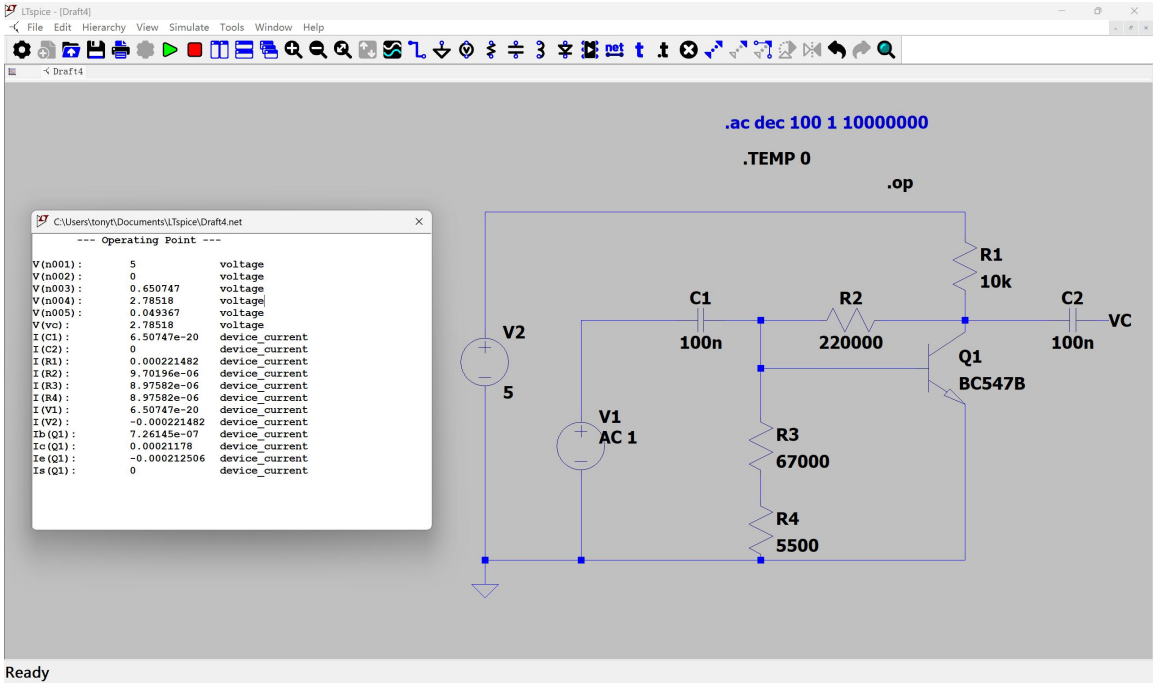

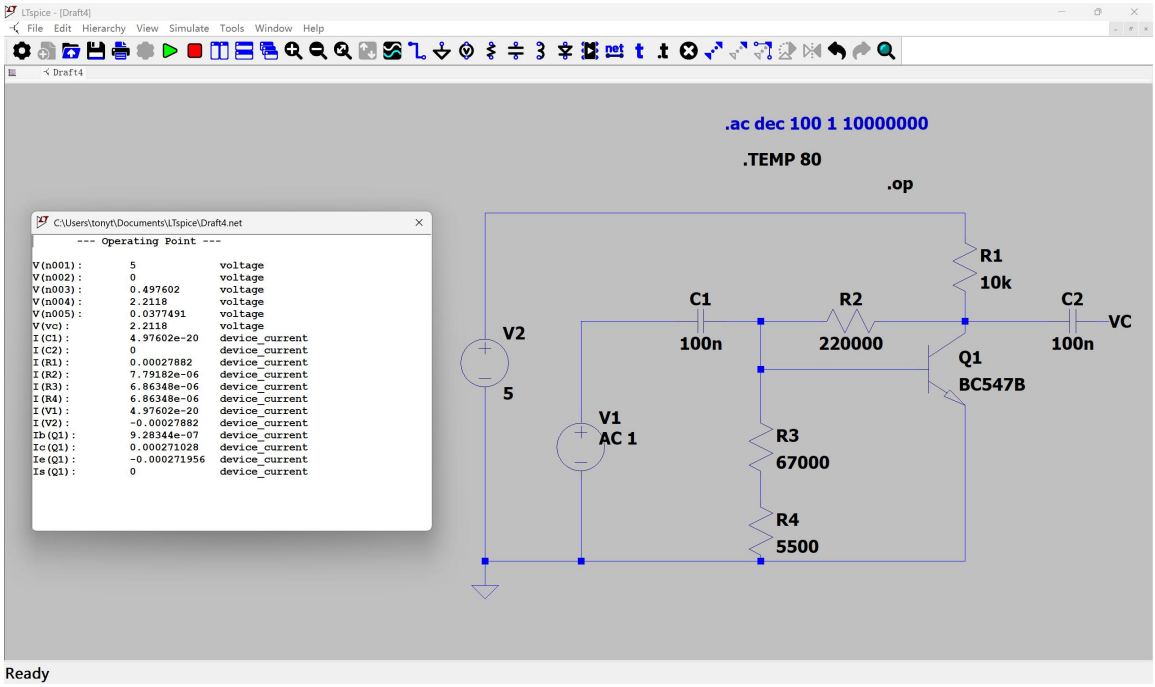

Power Consumption vs Temperature

T (°C)	Vn004 (V)	Vc (V)	I (A)	Power (W)
0	2.785	2.21482	0.000221	0.000491
10	2.714	2.28578	0.000229	0.000522
20	2.643	2.35695	0.000236	0.000556
30	2.572	2.42834	0.000243	0.000590
40	2.500	2.49993	0.000250	0.000625
50	2.428	2.57172	0.000257	0.000661
60	2.356	2.64369	0.000264	0.000699
70	2.284	2.71585	0.000272	0.000738
80	2.212	2.78820	0.000279	0.000777

Power consumption increases with temperature as I^c rises. The circuit dissipates approximately 0.5–0.8 mW over the 0–80°C range.

AC Gain

An AC sweep simulation from 1 Hz to 1 GHz confirmed the midband voltage gain of **38 dB** (equivalent to a linear gain of ×79). The Bode plot shows the expected bandpass shape: the lower cut-off is set by the coupling capacitors C_1 and C_2, and the upper cut-off is determined by the BJT's gain-bandwidth product.

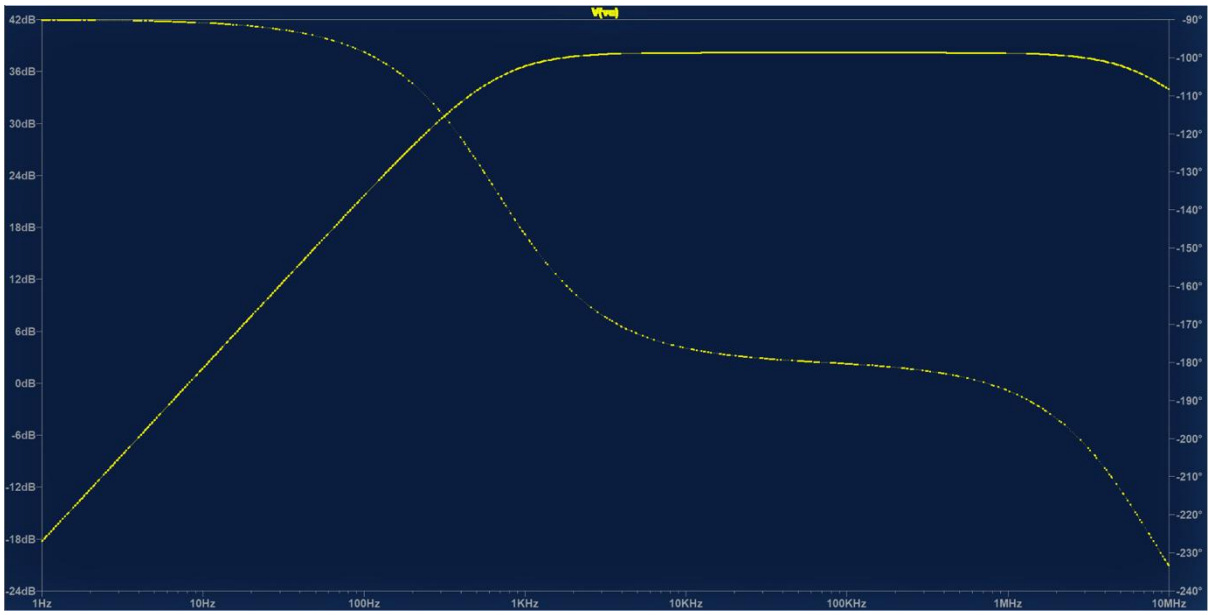

Small-Signal Analysis

Using the small-signal equivalent circuit with transconductance $g = I_C/V_T$ and output resistance r_o:

$$V_{out}/V_{in} = -g \cdot (R_C \parallel r_o)$$

Since r_o is typically very large, $R_C \parallel r_o \approx R_C$. For $V_C = V_{CC}/2$:

$$A_V \approx -(1/V_T) \cdot (\tfrac{1}{2}V_{CC}/R_C) \cdot R_C = -V_{CC}/(2V_T)$$

This shows that the voltage gain is independent of R_C and is set primarily by V_{CC} and V_T. This was confirmed by simulation: varying R_C did not alter the midband gain.

Component Optimisation — Observations

Each resistor was varied independently in simulation while holding others constant. The effects on gain and temperature sensitivity were recorded:

- **Increase R_{B1}:** Increases voltage gain; also increases temperature sensitivity (the bias becomes less stiff).
- **Increase R_{B2}:** Negligible effect on gain; decreases power consumption; increases temperature sensitivity.
- **Increase R_{B3}:** Same effect as R_{B2} (they are in series from base to ground, so their combined resistance determines the base bias).
- **Increase R_C:** No effect on voltage gain (as shown by small-signal analysis); reduces power consumption; slightly increases thermal sensitivity.

Design strategy: to maximise gain while minimising power and maintaining reasonable thermal stability, a large R_C = 10 kΩ was chosen (low power, gain-neutral). R_{B1} was set large (220 kΩ) to maximise gain. R_{B2} and R_{B3} were kept moderate (67 kΩ and 5.5 kΩ) to limit temperature sensitivity without significantly affecting gain.

The selected values give a midband gain of 38 dB with acceptable thermal performance over the 0–80°C range.

Challenge: Building and Characterising the Amplifier

Component Substitutions

R_{B2} = 67 kΩ and R_{B2} = 5.5 kΩ were unavailable; 68 kΩ and 5.6 kΩ were used instead.

Measured Frequency Response (10 Hz to 32 kHz)

All results are based on experimentally measured data, not on numerical or circuit simulations.

Frequency (Hz)	Vout (mV)	Vin (mV)	Gain (dB)
10	14.2	13.2	0.63
32	44	12.4	11.00
100	150.9	13.0	21.29
320	404.2	12.3	30.33
1000	690.6	10.3	36.53
3200	753.6	9.6	37.90
10000	765.1	9.2	38.40
32000	736.5	8.8	38.45
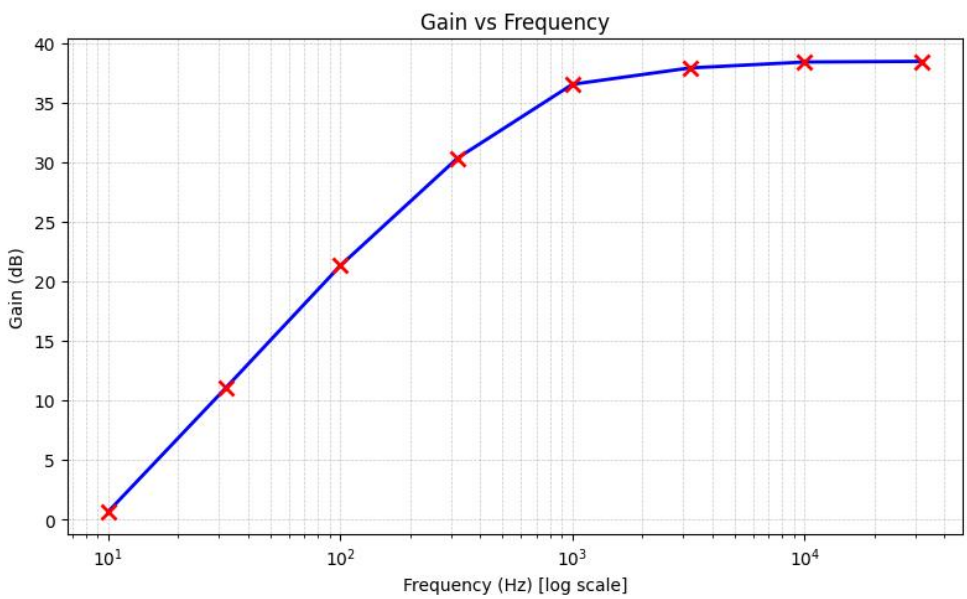
The measured frequency response closely matches the LTspice simulation. The midband gain reaches approximately **38.4 dB** at 10–32 kHz, consistent with the design target of 38 dB. The gain roll-off at low frequencies arises from the coupling capacitors C_1 and C_2 forming high-pass filters, while the gradual fall at high frequencies reflects the BJT's decreasing current gain.